INSTRUCTION SHEET FOR0006 - TRANSFORMATION PLUGS

APPLICATION

Transform a SD6 or Bondioli valve into a closed center.

INSTALLATION

SD6 Valve (Figures 1-1a)

1. **Figure 1:** Remove the original plug (item 1), the 90º 9/16"-18JIC male x 3/4"-16 ORB male elbow (item 2) and the hydraulic hose (item 3).

2. **Figure 1a:** Install the transformation plug (item 1), the 90º 9/16"-18 JIC male x 3/4"-16 ORB male (item 2) and the hydraulic hose (item 3) in the port indicated on the figure.

3. **Figure 1a:** Install the original plug (item 4) in the hydraulic output port.

4. **Figure 1a:** Tighten the transformation plug (item 1) and the original plug (item 4) at 17.7 ft/lb.

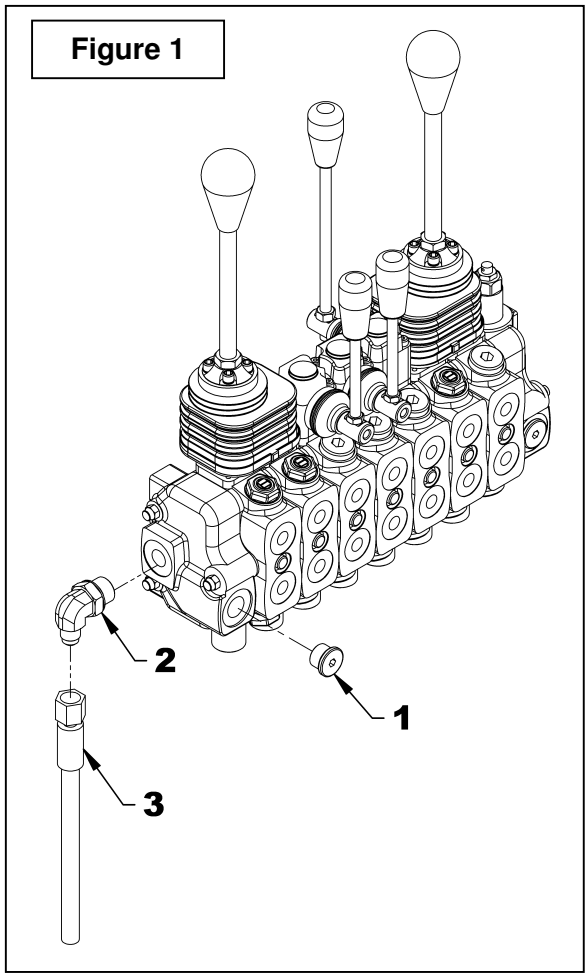

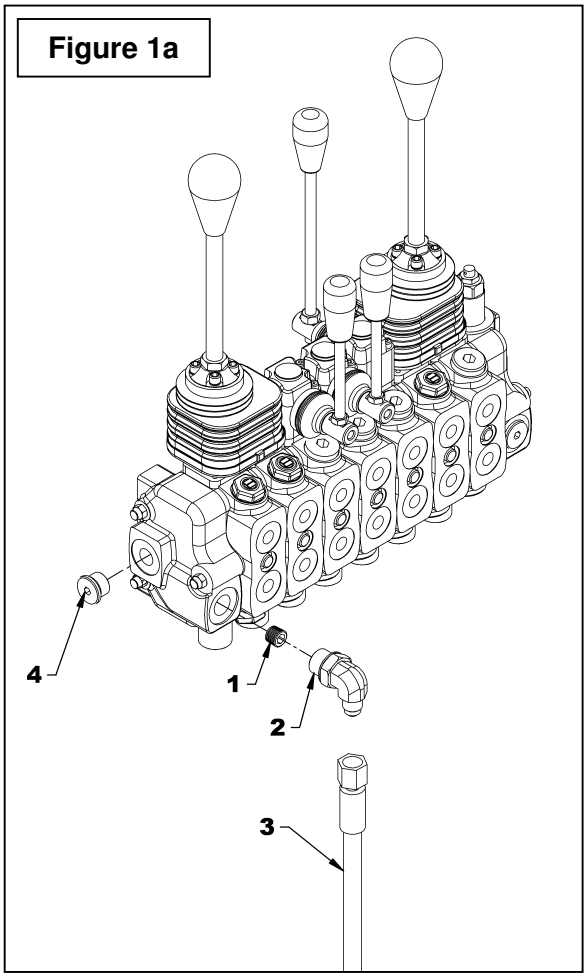

INSTRUCTION SHEET FOR0006 - TRANSFORMATION PLUGS

Bondioli Valve ***(Figures 2-2a)***

1. **Figure 2:** Remove the two hex. head plugs (item 1), the allen head plug (item 2), the 90º 3/4" ORB male x 9/16" JIC male elbow (item 3) and the hydraulic hose (item 4).
2. **Figure 2a:** Install the two transformation plugs (item 1) and the allen head plug (item 2) in the ports indicated on the figure.
3. **Figure 2a:** Install the 90º 3/4" ORB male x 9/16" JIC male (item 3) and the hydraulic hose (item 4) as illustrated on the figure.
4. Tighten the transformation plugs (item 3) and the original plug (item 2) at 60 ft/lb.

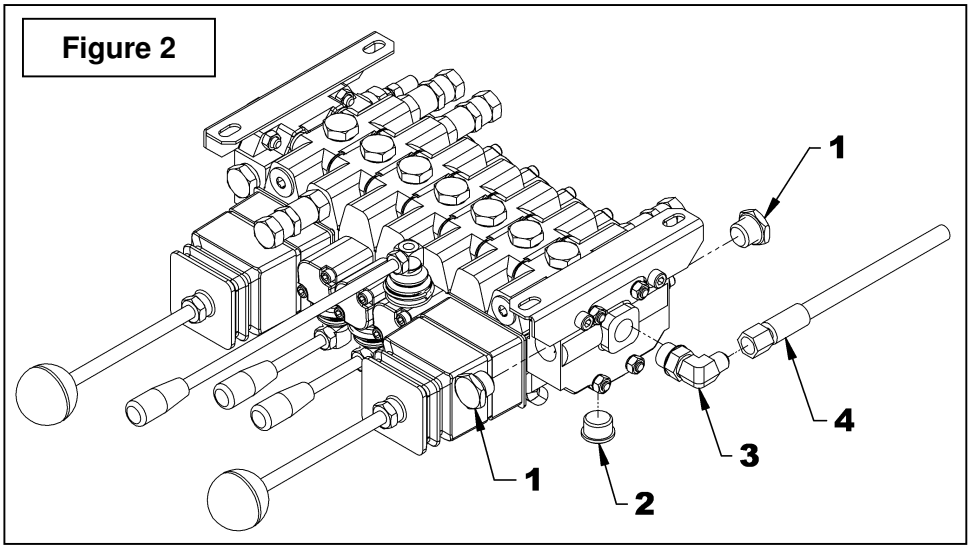

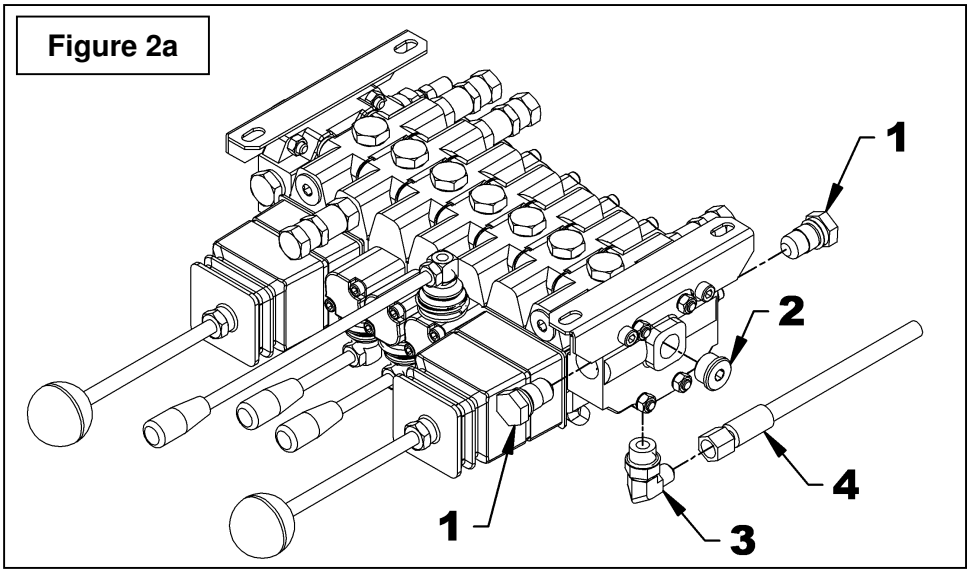

INSTRUCTION SHEET FOR0006 - TRANSFORMATION PLUGS

PARTS
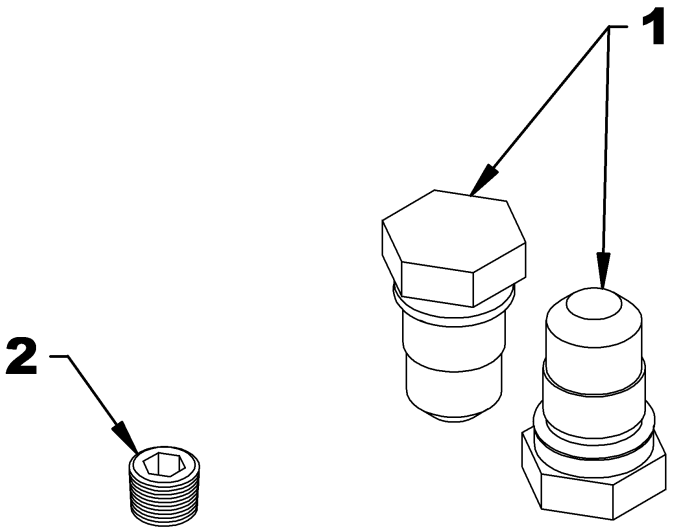
REF.	DESCRIPTION	QTY	PART#
1	Transformation plug kit for Bondioli valve	1	3900413
2	Transformation plug for SD6 valve	1	3900347